Reg. No. | | | | | | | | | |

Question Paper Code : 15737

B.E. / B.TECH. DEGREE EXAMINATION, NOVEMBER / DECEMBER 2019

Third Semester

Common to B.E. – Computer Science and Engineering & B.Tech. – Information Technology

15CS302 – DIGITAL PRINCIPLES AND SYSTEM DESIGN

(Regulations: Mepco – R2015)

Duration: 3 Hours Max. : 100 Marks

Answer ALL Questions

BTL,CO **PART A – (10 × 2 = 20 Marks)**

A, CO1 1. The minterm expansion of f(P, Q, R) = PQ + QR' + PR' is _____. Justify.

A) m2 + m4 + m6 + m7 B) m0 + m1 + m3 + m5

C) m0 + m1 + m6 + m7 D) m2 + m3 + m4 + m5

A, CO1 2. _____ and _____ are the 7's and 8's complement of 5264127. Justify.

U, CO2 3. How can we avoid the ambiguity in enabling multiple inputs in an encoder? Give an example.

A, CO2 4. The number of full and half-adders required to add 16-bit binary number is _____. Justify.

A) 8 half adders and 8 full adders B) 1 half adder and 15 full adders

C) 16 half adders and 0 full adders D) 4 half adders and 12 full adders

A, CO3 5. The ROM size required for designing a magnitude comparator that compares two 8 bit numbers is _____. Justify.

U, CO3 6. Can we use Hamming Code / Parity code to detect 2 bit errors? How?

A, CO4 7. Let $k = 2^n$. A circuit is built by giving the output of an n-bit binary counter as input to an n-to-2^n bit decoder. This circuit is equivalent to a _____. Justify your answer.

A) k-bit binary up counter B) k-bit binary down counter

C) k-bit ring counter D) k-bit Johnson counter

U, CO4 8. Differentiate Mealy and Moore machine.

R, CO5 9. List the steps in designing a asynchronous sequential circuit.

U, CO5 10. How will you eliminate essential hazards?

PART B – (5 × 16 = 80 Marks)

A, CO1 11. a) i. Find the minimal sum of products for the Boolean expression, $F(W,X,Y,Z)=\sum_m (0,3,5,6,7,10,12,13) + \sum_d (2,9,15)$ using K map and draw the circuit using NAND gates. (12 Marks)

A, CO1 11. a) ii. Minimize the following function into A) SOP and B) POS forms:

$F=\sum_m (1,3,4,6,7,12,13) + \sum_d (8,9,10,11)$ (4 Marks)

OR

A, CO1 11. b) i. Find the minimal sum of products for the Boolean expression, $F(a,b,c,d)=\sum_m (0,1,2,3,9,10,11) + \sum_d (6,12,14,15)$ using the Quine-McCluskey method. (12 Marks)

A, CO1 11. b) ii. Implement the following function using only NOR gates:

F = A+(B+C')(D'E+F) (4 Marks)

A, CO2 12. a) i. Design a combinational circuit that converts 8421 code to 2421 code. (10 Marks)

U, CO2 12. a) ii. Discuss in detail about a 4 bit magnitude comparator. (6 Marks)

OR

A, CO2 12. b) i. Design a full subtractor using A) Decoder and B) Multiplexer (10 Marks)

U, CO2 12. b) ii. Elaborate the design of a BCD adder. (6 Marks)

A, CO3 13. a) i. Implement the following functions using PLA:

$F1(A,B,C)=\Sigma(0,1,3,4)$

$F2(A,B,C)=\Sigma(1,2,3,4,5)$ (8 Marks)

U, CO3 13. a) ii. Explain in detail about error detection and correction using Hamming Code. (8 Marks)

OR

A, CO3 13. b) i. Implement the following 3 Boolean functions using PAL:

$X = \Sigma(1,2,4,5,7)$

$Y = \Sigma(0,1,3,5,7)$

$Z = \Sigma(0,2,5,7)$ (8 Marks)

U, CO3 13. b) ii. Explain the process of selecting words in memory using RAM decoding. How can we reduce the number of gates in the memory decoder? (8 Marks)

A, CO4 14. a) i. Design a 4-bit binary counter using T- Flip-flop. (12 Marks)

U, CO4 14. a) ii. Compare latches and flipflops. (4 Marks)

OR

A, CO4 14. b) i. Design a sequence detector that produces an output '1' whenever the non-overlapping sequence 1011 is detected. (12 Marks)

U, CO4 14. b) ii. Explain the function of JK flip-flop with suitable diagram. (4 Marks)

A, CO5 15. a) i. Analyze the following asynchronous sequential circuit by constructing the transition table and flow table.

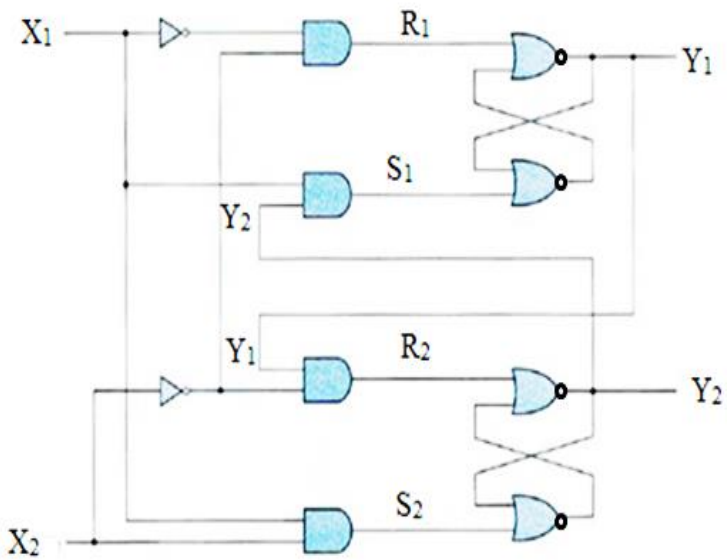

(10 Marks)

A, CO5 15. a) ii. Implement the boolean function $F(A,B,C,D)=\sum(1, 3, 5, 7, 8, 9, 12, 13)$ without static hazards. (6 Marks)

OR

A, CO5 15. b) Consider a circuit with two inputs, D and G and one output, Q. Output Q follows D with G=1, otherwise Q holds its value. Design the circuit using A) Gates and B) SR Latches built with NAND gates. (16 Marks)